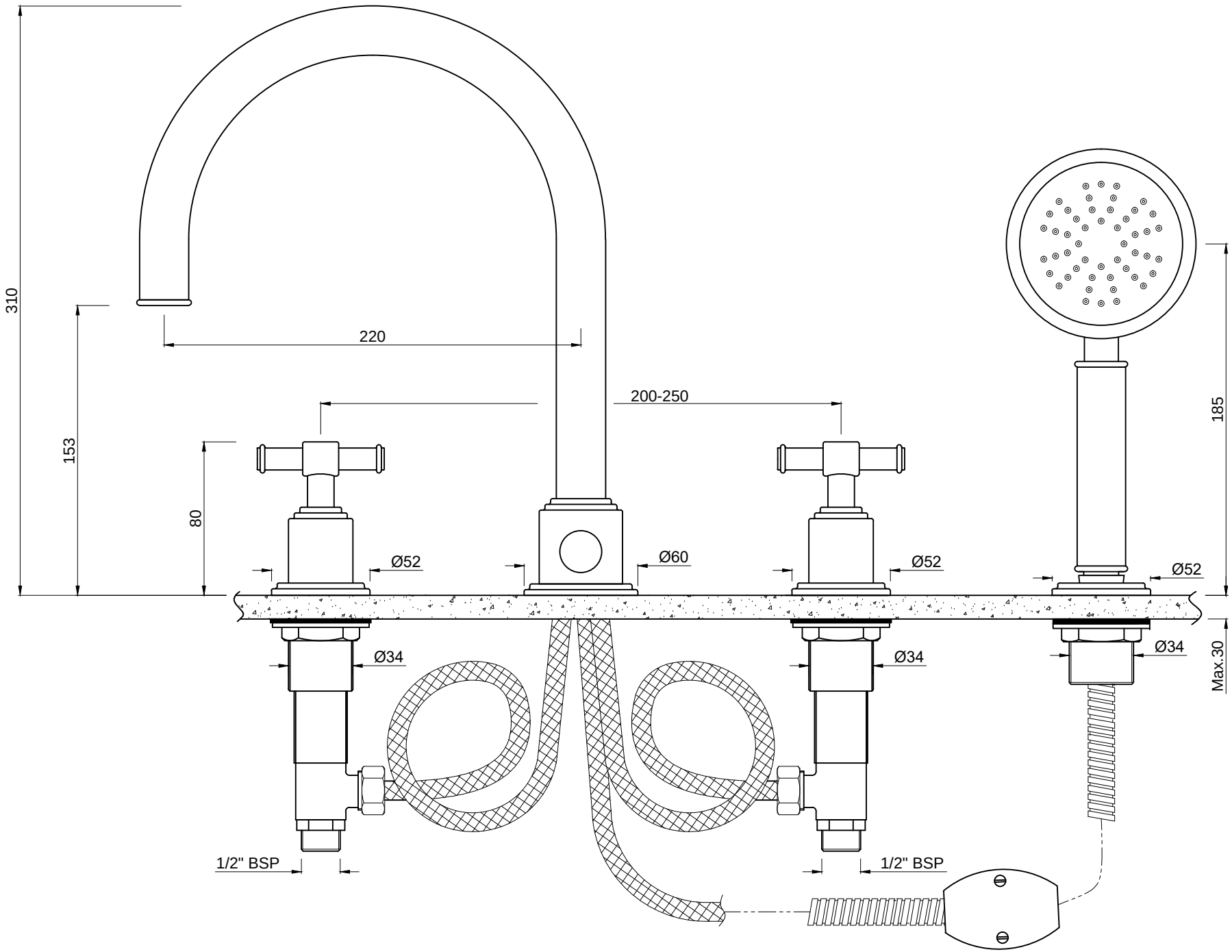Cat. No.-VIC-503277