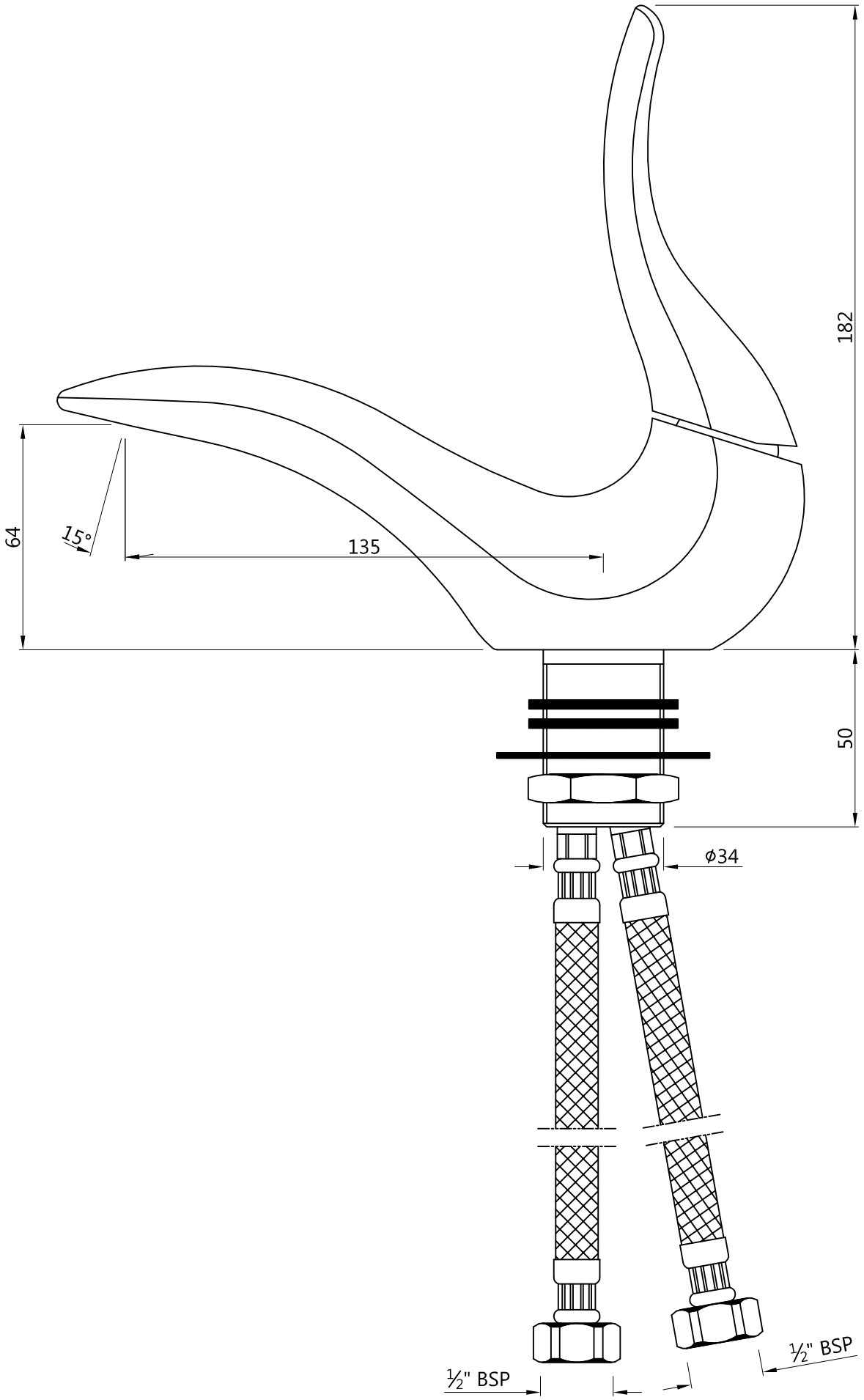S.L. BASIN MIXER WITH BRAIDED HOSES	Cat. No.-TWR-75011 B